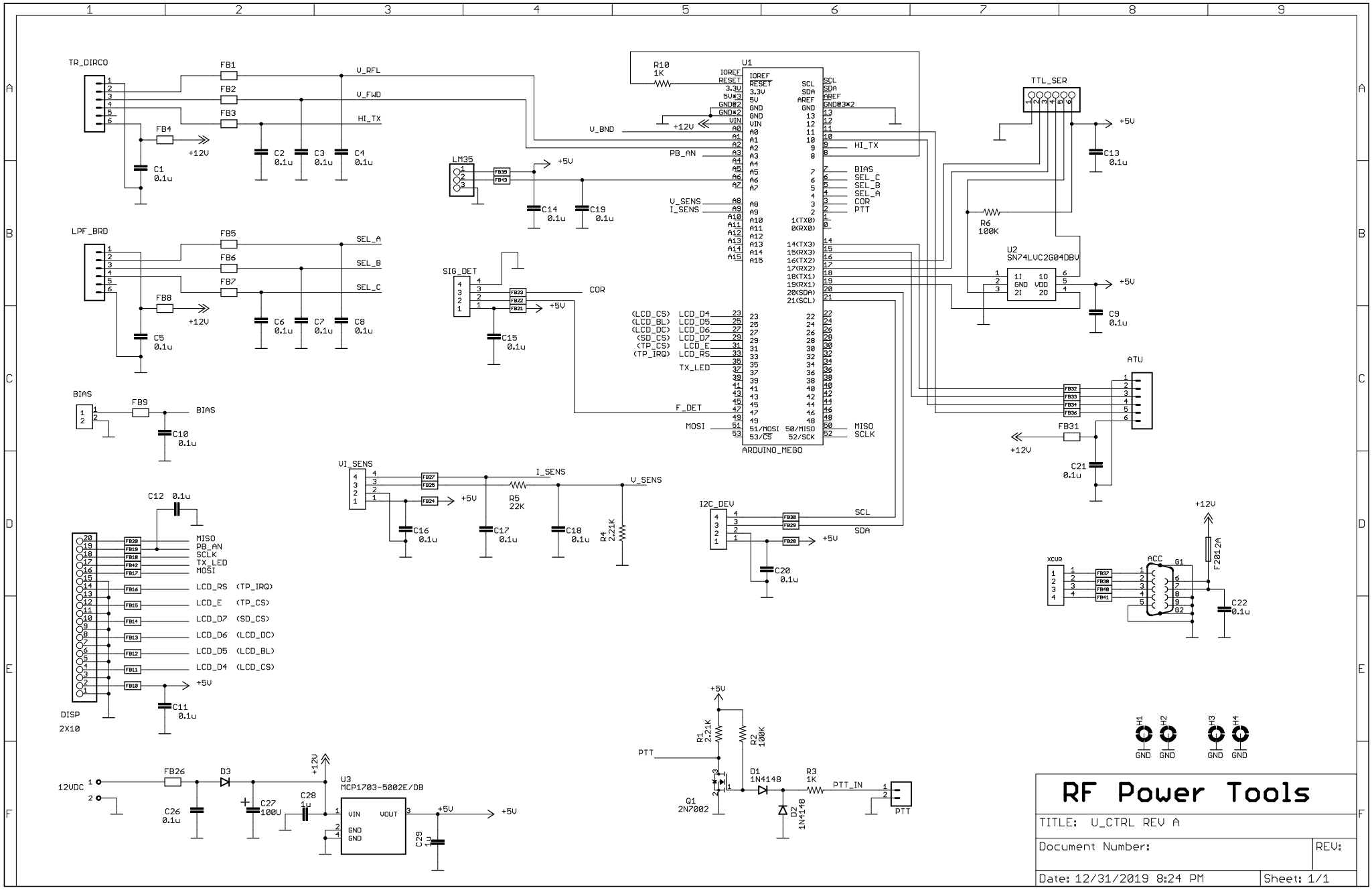
TR_DIRCO
FB1
FB2
FB3
FB4
V_RFL
V_FWD
HI_TX
+12V
C1 0.1u
C2 0.1u
C3 0.1u
C4 0.1u
LPF_BRD
FB5
FB6
FB7
FB8
SEL_A
SEL_B
SEL_C
C5 0.1u
C6 0.1u
C7 0.1u
C8 0.1u
BIAS
FB9
C10 0.1u
LM35
FB39
FB43
+5V
C14 0.1u
C19 0.1u
SIG_DET
FB23
FB22
FB21
COR
C15 0.1u
U1
ARDUINO_MEGO
R10 1K
V_BND
PB_AN
V_SENS
I_SENS
(LCD_CS) LCD_D4
(LCD_BL) LCD_D5
(LCD_DC) LCD_D6
(SD_CS) LCD_D7
(TP_CS) LCD_E
(TP_IRQ) LCD_RS
TX_LED
F_DET
MOSI
MISO
SCLK
SCL
SDA
BIAS
SEL_C
SEL_B
SEL_A
COR
PTT
1(TX0)
0(RX0)
14(TX3)
15(RX3)
16(TX2)
17(RX2)
18(TX1)
19(RX1)
20(SDA)
21(SCL)
51/MOSI 50/MISO
53/CS 52/SCK
TTL_SER
C13 0.1u
R6 100K
U2
SN74LVC2G04DBV
C9 0.1u
ATU
FB32
FB33
FB34
FB35
FB31
C21 0.1u
VI_SENS
FB27
FB25
FB24
C16 0.1u
I_SENS
R5 22K
C17 0.1u
C18 0.1u
R4 2.21K
V_SENS
I2C_DEV
FB30
FB29
FB28
C20 0.1u
C12 0.1u
FB20
FB19
FB18
FB42
FB17
FB16
FB15
FB14
FB13
FB12
FB11
FB10
LCD_RS (TP_IRQ)
LCD_E (TP_CS)
LCD_D7 (SD_CS)
LCD_D6 (LCD_DC)
LCD_D5 (LCD_BL)
LCD_D4 (LCD_CS)
C11 0.1u
DISP
2X10
XCVR
FB37
FB38
FB40
FB41
ACC
G1
G2
F2012H
C22 0.1u
H1
H2
H3
H4
GND
12VDC
FB26
D3
C26 0.1u
C27 100U
C28 1u
U3
MCP1703-5002E/DB
VIN
VOUT
GND
C29 1u
R1 2.21K
R2 100K
Q1 2N7002
D1 1N4148
D2 1N4148
R3 1K
PTT_IN
PTT
RF Power Tools
TITLE: U_CTRL REV A
Document Number:
REV:
Date: 12/31/2019 8:24 PM
Sheet: 1/1